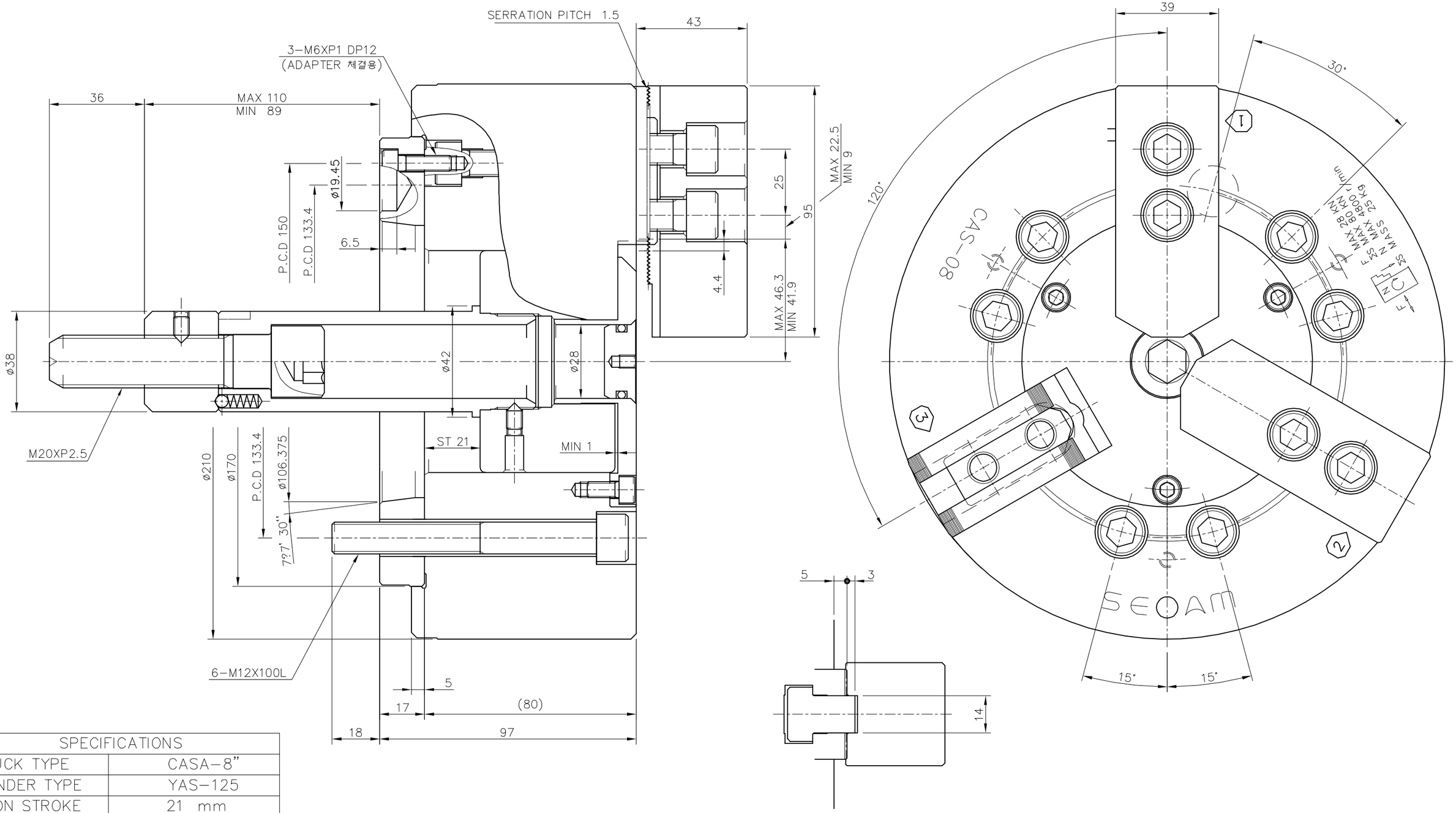

SPECIFICATIONS		
CHUCK TYPE	CASA-8"	
CYLINDER TYPE	YAS-125	
PISTON STROKE	21 mm	
JAW STROKE (DIA.)	MAX	8.8 mm
	상 용	- mm
MAX. OPERATING PRESSURE	MAX	25 kg/cm²
	상 용	- kg/cm²
MAX. DRAW BAR PULL	2,856 (28KN) kgf	
CLAMPING FORCE (실린더력 4,080 일때)	8,160 kgf (80KN)	
MAX R.P.M	4,800 r.p.m	
WEIGHT	25 kg	
GD²	0.137 kg-m²	

SCALE	PROJECTION	ITEM NO.	CASA-08
1:1		PART NAME	CLOSED CENTER POWER CHUCK ASS'Y
SEOAM 서암기계공업주식회사 SEOAM MACHINERY INDUSTRY CO.,LTD.		PART NO.	1ASA08