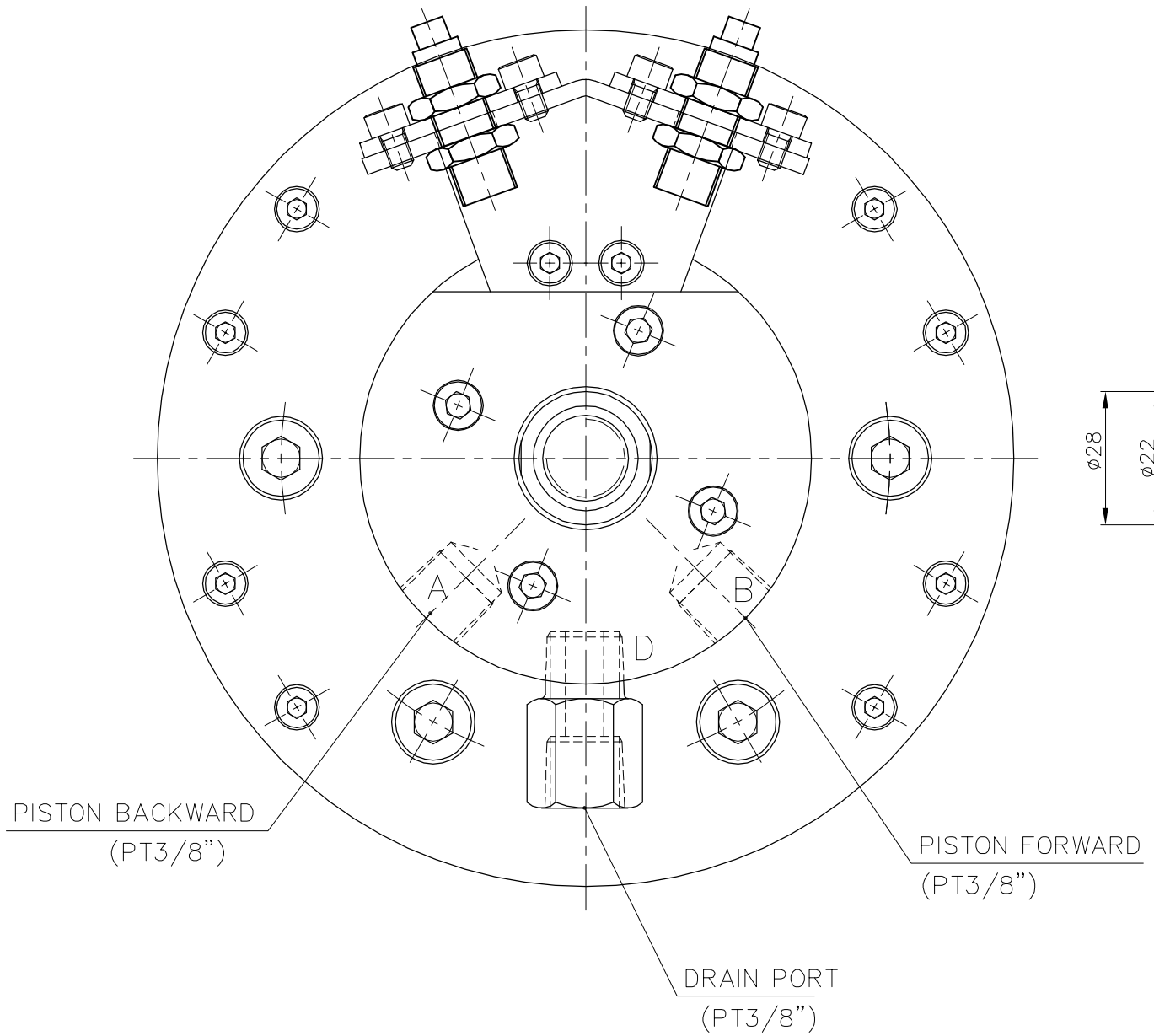

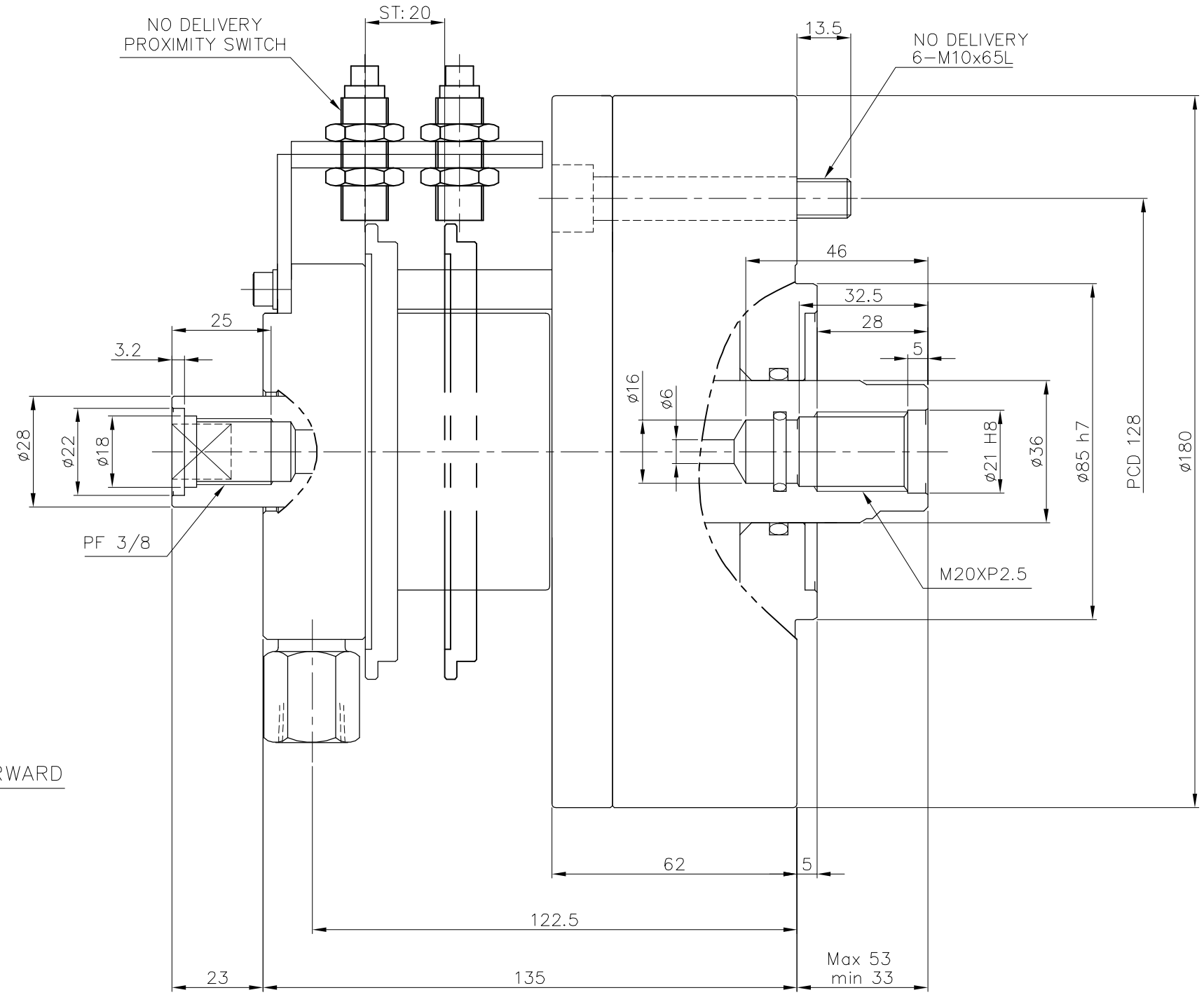

SPECIFICATIONS		
CHUCK TYPE	YMS-105-20	
CYLINDER DIA	150 mm	
PISTON STROKE	20 mm	
PISTON AREA	EXTEND 83 cm^2	RETRACT 76.4 cm^2
MAX. DRAW BAR PULL	EXTEND 3183 Kgf	RETRACT 2930 Kgf
MAX. OPERATING PRESSURE	4.0 MPa (40.8 Kg_f/cm^2)	
MIN. OPERATING PRESSURE	0.5 MPa (5 Kg_f/cm^2)	
MAX.PERMISSIBLE SPEED	6000 rpm	
WEIGHT	14 Kg	
MOMENT OF INERTIA(GD^2)	0.16 Kg .m^2	
TATAL LEAKAGE	1.0 L/min	
(1 KN = 100 kgf , 1 MPa = 10 kgf/cm²)		

SCALE	PROJECTION	ITEM NO.	YMS-105-20
1:1		PART NAME	CLOSED HYDRAULIC CYLINDER
SEOAM 서암기계공업주식회사 SEOAM MACHINERY INDUSTRY CO.,LTD.		PART NO.	2MS10