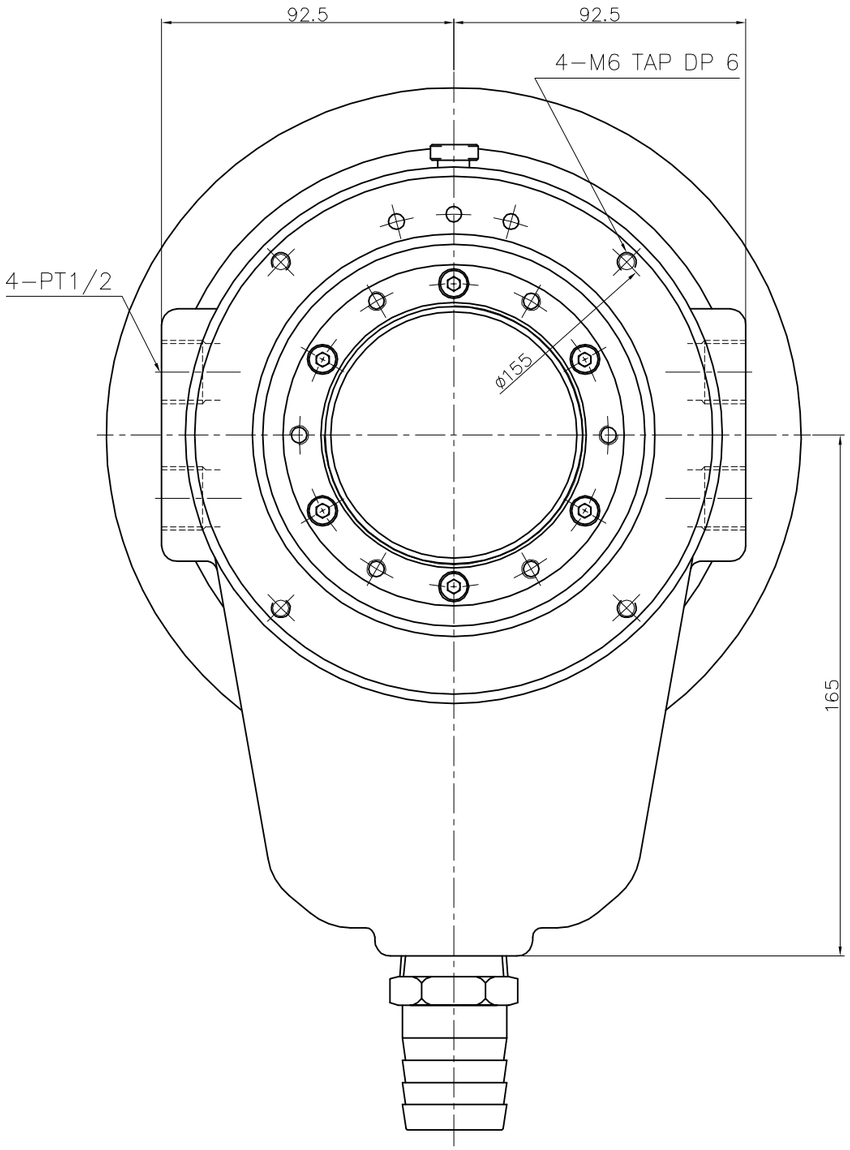

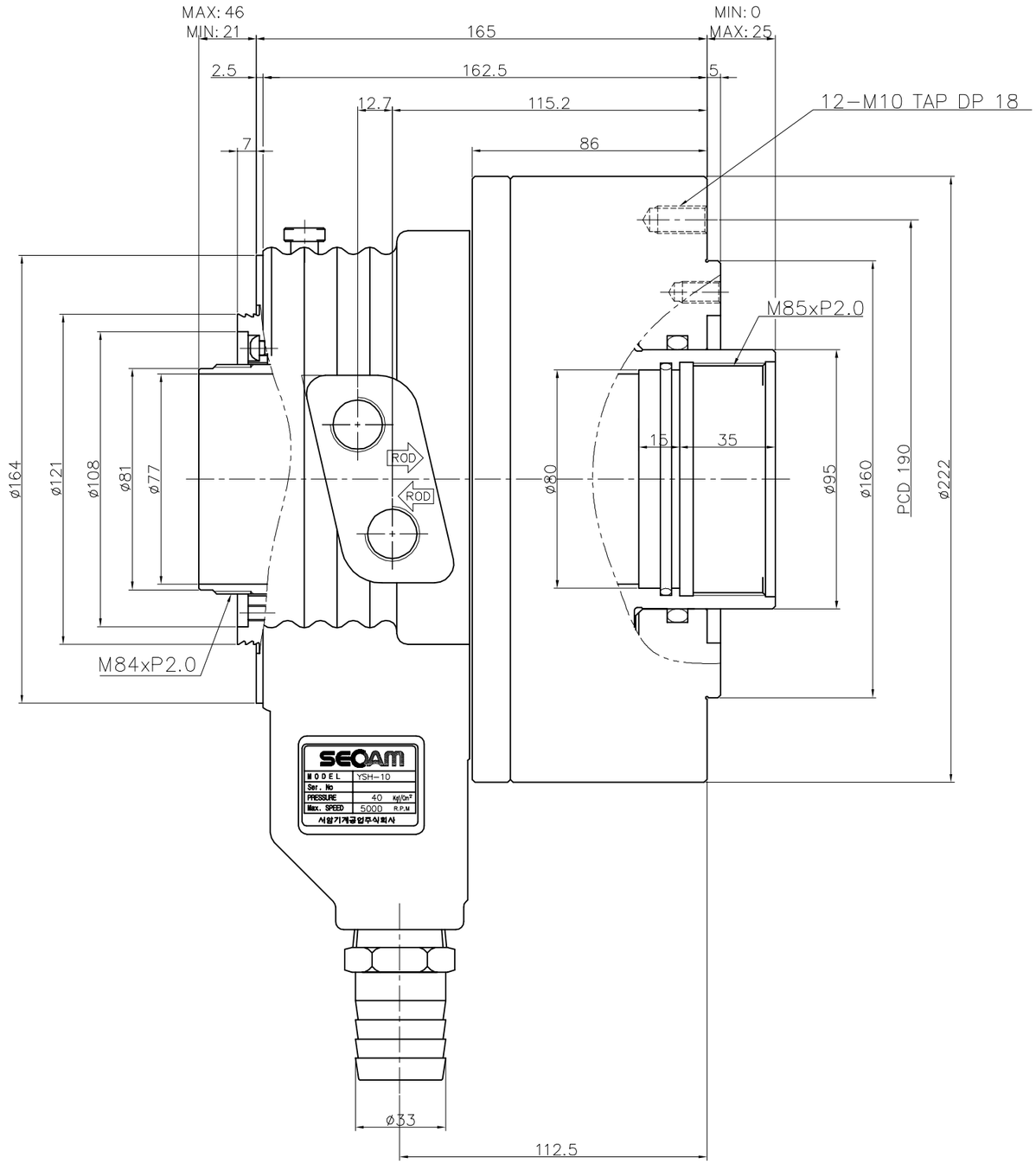

SPECIFICATIONS		
CHUCK TYPE	YSH-10	
CYLINDER DIA	185 mm	
PISTON STROKE	25 mm	
PISTON AREA	EXTEND 209 cm^2	RETRACT 193.9 cm^2
MAX. DRAW BAR PULL	EXTEND 7,944 Kgf	RETRACT 7,357 Kgf
MAX. OPERATING PRESSURE	4.0 MPa (40.8 Kg_f/cm^2)	
MIN. OPERATING PRESSURE	0.5 MPa (5 Kg_f/cm^2)	
MAX.PERMISSIBLE SPEED	5000 rpm	
WEIGHT	16.8 Kg	
MOMENT OF INERTIA(GD^2)	0.083 Kg .m ^{2}	
TATAL LEAKAGE	4.0	
(1 KN = 100 kgf , 1 MPa = 10 kgf/cm ^{2})		

SCALE	PROJECTION	ITEM NO.	YSH-10
1:1		PART NAME	SUPER HIGH SPEED BIG BORE HYDRAULIC CYLINDER
SEOAM 서암기계공업주식회사 SEOAM MACHINERY INDUSTRY CO.,LTD.		PART NO.	2SH10